Saeco INTERNATIONAL GROUP

CA SAECO MAGIC COMFORT + REDESIGN

VERSIONI (AUS) (D) (B) (USA) (CH) (RC)

TYPE: SUP 012 DER

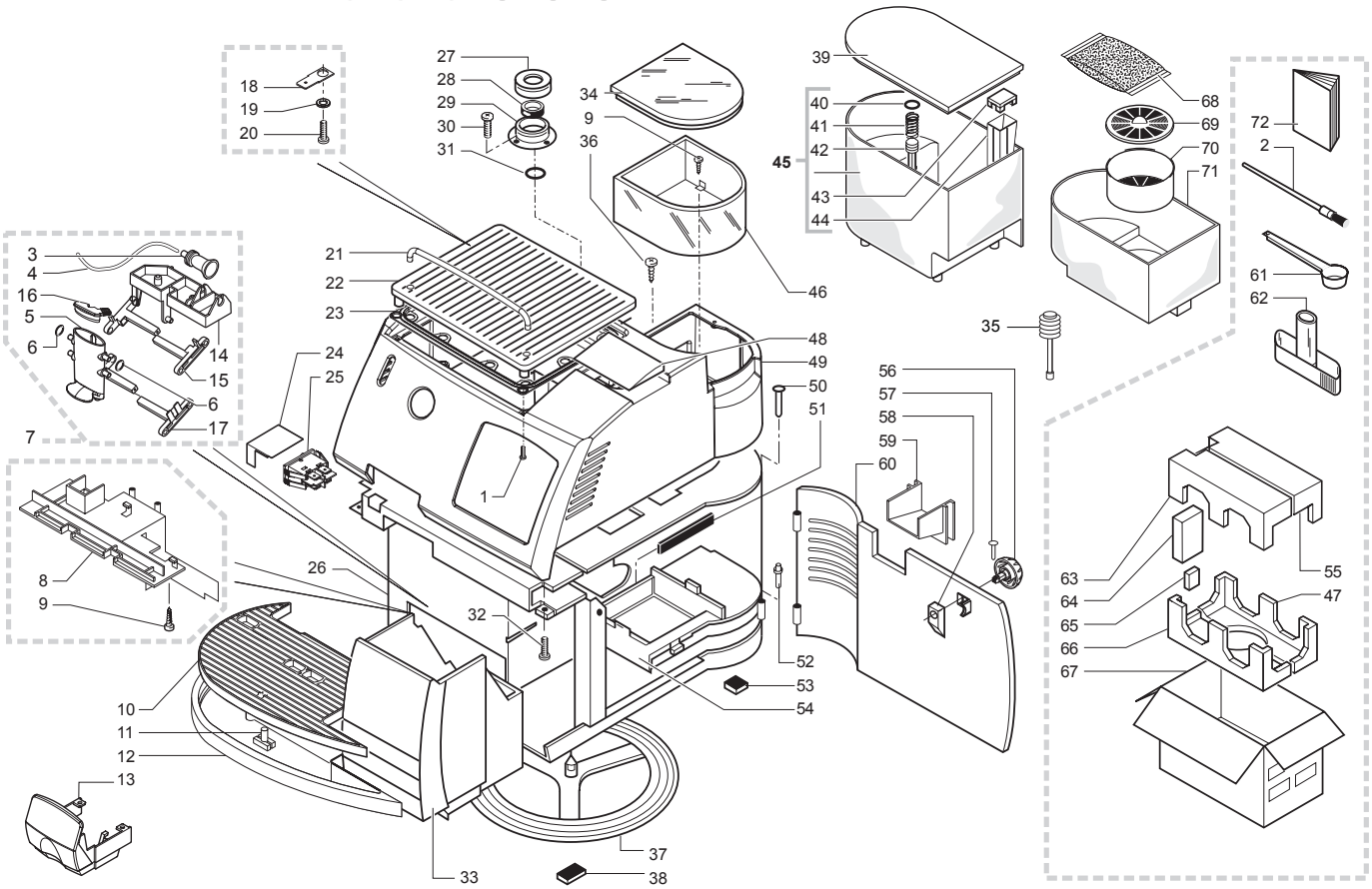

Rif.	Code	Description	Version
01	129824002	TCB SCREW M4X10 UNI 7687 ZNP	
02	127390100	BRUSH FOR CLEANING	
03	0347.011.050	FIDEX SLEEVE	
04	JS01.005	SILICONE TUBE 5X8	ROLL BROWN
05	0360.005.710	MOBILE DISPENSER CASING GREY RED.	
06	NM02.010	OR ORM 0050-20 TERMOIL	
07	0360.A03.710	DISPENSER ASS. REDESIGN	
08	0301.033.150	TANK CASING GREY	
09	129670202	TCB PANELVIT SCREW 3,5X16 TESTA D=8 ZNP	
10	0347.009.430	CHROMATE GRID FOR TANK	
11	0347.013.970	RED BALL FLOAT	
12	0314.022.770	SILVER DRIP TRAY	
13	0360.006.430	DISPENSER COVER RED.IN ZAMA CROM.	
14	0347.005.710	FIXED CASING DISPENSER BLACK	
15	0347.A02.710	WHOLE MESH GREY UPPER DISP.RAL 7021	
16	0360.024.050	CAP FOR BODY	
17	0347.A05.710	WHOLE MESH GREY LOWER DISP. RAL7021	
18	NE15.003	MALE TONGUE PLAIN 6,3 D.5,2	
19	128310404	WASHER UNI 8842 A4 BURNISHED	
20	129573402	SCREW TAPT M4X10 DIN 7985 GALV	
21	0360.031	TUBE	
22	0360.032.660	CLEAR GREY CUPWARMING PLATE ASSY.	
23	0317.006	CUPWARMER SEAL	
24	0327.036	GENERAL SWITCH PROTECTION	
25	NE03.038	BIPOLAR SWITCH FUSIT C1250AR	(USA) (RC)
	NE03.028	SWITCH B1031C1181000W	
26	0312.026.660	CASING ASS. SILVER T.F.	
27	0701.031.150	SEAL COVER GREY	
28	145842900	WATER CONTAIN.VALVE SEAL GACO DIM14	
29	0701.014.150	SEAL CONTAINER GREY	
30	129532521	SCREW TSP2,9X9,5 DIN 7982 SS	
31	NM02.004	OR ORM 0080-20 TERMOIL	
32	U110.005	screw AUT.TCB 3,9X9,5 DIN 7981 F	
33	0312.032.770	DUMP BOX PAINTED SILVER	
34	0301.022.770	SILVER COFFEE LID	
35	147700200	LOADING PUMP DIAMETER 17 MM	(USA)
36	U143.007	screw TORX TCB 2,9X19 SS BUR	
37	0301.048.150	ROTATING RING GREY	
38	9991.096	ADHESIVE FOOT 8X15X3,2	
39	0301.023.770	SILVER WATER LID	
40	NM01.032	RED SILICONE OR ORM 0060-30	
41	9161.110	SPRING FOR PISTON FOR SUPERAUTOM.	
42	9111.027.150	GREY PISTON FOR WATER CONTAINER	
43	9161.050.230	NAT/TRANSP.CAP FOR FLOATING SPACE MAGIC	
44	9161.112.150	LEVEL FLOAT GREY	
45	0301.046.230	WATER TANK ASS. SUPERAUTOM.	
	0317.A16.230	WATER TANK ASS. MAGIC UL	(USA)

Rif.	Code	Description	Version
46	0329.006.230	COFFEE CONTAINER	
	0317.010.230	COFFEE CONTAINER UL	(USA)
47	0314.905	TECHMATE RIGHT LOWER INSERT	
48	0301.029.770	POWDER DOSER LID SILVER	
49	0361.001.770	LID MAGIC CONFORT+ REDESIGN	
50	0301.019	PEG FOR DOOR SUPERAUTOM.	
51	9161.140	SEAL FOR UNIT PLATE	
52	0301.020	PIN FOR DOOR SUPERAUTOMATICA	
53	NV01.001	ADHESIVE FOOT	
54	0301.041.150	UNIT SUPPORT PLATE GREY	
55	0317.903	RIGHT UPPER INSERT IN TECHMATE	
56	0360.018.710	DOOR CLOSURE KNOB RED.SER.	
57	U433.001	NAIL 2X06 UNI 7591 BURN.	
58	0301.040.150	DOOR CLOSURE LEVER GREY	
59	0313.012.710	DOOR COVER S/SCREEN GREY	
60	0360.017.660	DOOR ASS. MAGIC SILVER	
61	9991.040.150	MEASURE GREY	
62	9161.021.150	KEY FOR BREW UNIT GREY	
63	0317.902	LEFT UPPER INSERT IN TECHMATE	
64	0314.909	DRIP TRAY BOX	
65	0330.906	SPACER IN POLYSTYRENE	
66	0314.904	TECHMATE LEFT LOWER INSERT	
67	0360.901	EXTERNAL BOX FLEXO MAGIC	
68	0313.013	RESIN PACKET INTAFIL SYSTEM	(D)
69	0313.015	RESIN CONTAINER LID INTAFIL	(D)
70	0313.014	RESIN CONTAINER INTAFIL SYSTEM	(D)
71	0313.016	WATER TANK ADAPTER INTAFIL	(D)
72	0361.951	INST.BOOKLET SAECO MAGIC COMFORT D	
	0361.952	INST.BOOKLET SAECO MAGIC COMFORT F	
	0361.953	INST.BOOKLET SAECO MAGIC COMFORT I	
	0361.954	INST.BOOKLET SAECO MAGIC COMFORT NL	
	0361.955	INST.BOOKLET SAECO MAGIC COMFORT NL	
	0361.956	INST.BOOKLET SAECO MAGIC COMFORT E	
	0361.957	INST.BOOKLET SAECO MAGIC COMFORT P	

Saeco INTERNATIONAL GROUP

CA SAECO MAGIC COMFORT + REDESIGN

VERSIONI (AUS) (D) (B) (USA) (CH) (RC)

TYPE: SUP 012 DER

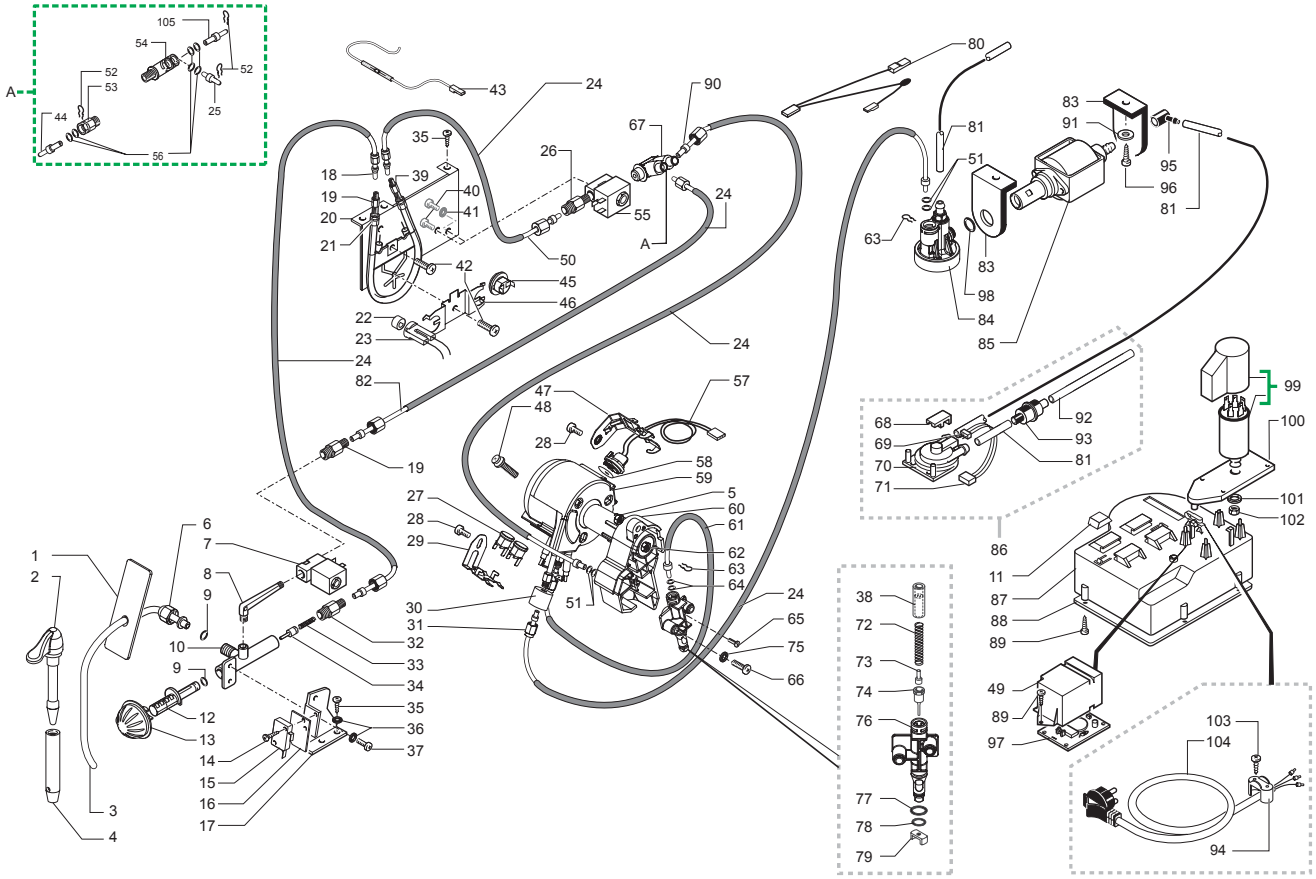

Rif.	Code	Description	Version
01	0360.021.150	INTERNAL PROTECTION FOR TUBE GREY	
02	9990.008.050	PANNARELLO ASS.BLACK REDESIGN	
03	0361.003	STEAM TUBE	
04	9991.153	EXTERNAL COVER PANNAREL.CHROMED	
05	U301.003	nut HEXAGONAL M3 UNI 5587	
06	9161.438	NUT FOR STEAM TUBE	
07	9121.115.00A	SOLEN. VALVE 15VA 2 WAY 1/8" FEM.230V	
	9121.115.00F	SOLEN. VALVE 15VA 2 WAY 1/8" FEM120V	
08	227900803	NIK/BRASS 90°CONNECTOR FOR FAUCET EV.	
09	NM02.011	OR ORM 0060-20 TERMOIL	
10	228443503	NIKELED/BRASS FAUCET BODY	
11	NM02.011	OR ORM 0060-20 TERMOIL	
12	9161.057	STEAM FAUCET ROD	
13	0347.017.710	GREY STEAM KNOB RAL 7021 SERIG.	
14	U109.014	screw AUT.TCB 2,9X16 DIN 7981 C	
15	NE05.013	MICROSWITCH	
16	9991.014	CARD FOR MICRO SWITCHES	
17	0301.006	BRACKET FOR STEAM FAUCET	
18	9979.B28	TEFLON ASS. TUBE 2X4 L.200	
19	227961903	NIK/BRASS CONNECTOR FOR TUBE TEFLON 4X2	
20	0334.001	NEW SYSTEM BRACKET	
21	0361.R01.00A	KIT SPARES BOILER VAP.MAGIC 230V	
		UP TO S/N.9005MM40756141	
	0361.R01.00F	KIT SPARES BOILER VAP.MAGIC 120V	
		UP TO S/N.9005MM40756141	
	9010.148.00A	BOILER ASS. CONFORT+ 230V	
		FROM S/N.9005MM40756142	
	9010.148.00F	BOILER ASS. CONFORT+ 120V	
		FROM S/N.9005MM40756142	
22	9011.089	SPACER FOR SENSOR	
23	9019.A65	SENSOR ASS. FOR AUTOMATICA	
	9019.A66	SENSOR ASS. FOR AUTOMATICA UL	
24	9972.329	BLACK SILICONE TUBE 7,5X9,3 L.=2000 MM	
25	227875100	CONNECTOR AS.TEFLON 2X4 L=275 MM	
		UP TO S/N.9005MM40756141	
26	227961903	NIK/BRASS CONNECTOR FOR TUBE TEFLON 4X2	
		FROM S/N.9005MM40756142	
27	189428200	THERMOSTAT 175° 1NT-08L-3794	
28	129573202	SCREW TCB TORX 20 M4X8 AUTOFORMING ZN-B	
29	126838117	2 THERMOSTATS FIXING SPRING	
30	147756562	PROTECTION FOR FOLK SPRING TUBE D=4	
31	9979.B30	TEFLON ASS. TUBE 2X4 L.200	
32	227962003	NIK/BRASS CONNECTOR FOR FAUCET	
33	9011.007	SPRING FOR PIN	
34	227660303	NIK/BRASS PISTON L=15,1 ASSY.	
35	U110.013	screw AUT.TCB 3,9X6,5 DIN 7981 F	

Rif.	Code	Description	Version
36	128310404	WASHER UNI 8842 A4 BURNISHED	
37	129823802	TCB SCREW M4X8 UNI 7687 ZNP	
38	9991.217	BRASS BUSH PIN BOILER	
39	227961803	NIK/BRASS INLET CONNECTOR BOILER	
40	U043.012	SCREW TCB TORX 20 M4X6 ZN-B	
41	128310404	WASHER UNI 8842 A4 BURNISHED	
42	U046.003	SCREW TCBD TORX 20 M4X12 ZN-B	
43	0334.822	CABLE 1 WIRE SILIC.WHITE TH/FUSE 216°	
	0334.823	CABLE 1WIRE SIL.WHITE AWG16 TH/FUSE 216°	
44	9979.B29	TEFLON ASS. TUBE 2X4 L.280	
		UP TO S/N.9005MM40756141	
45	NE09.006	THERMOSTAT 170°NC FAST. 90°+WASHER	
46	9011.187	THERMOSTAT RETAINING SPRING	
47	126838217	SENSOR FIXING SPRING	
48	129932202	ROUND HEAD SCREW 10.9 M5X20 GALV	
49	9161.336.150	COVER FOR FILTER CARD GREY UL	(USA)
	9161.126.150	COVER FOR FILTER CARD GREY	(RC)
50	9979.B47	TEFLON ASS. TUBE 4X2 L.320 OG-OG	
		FROM S/N.9005MM40756142	
51	140328059	OR 2015 IN SILICONE PTFE/FDA	
52	9011.144	SS FORK FOR TUBE D.4	
		UP TO S/N.9005MM40756141	
53	9011.152	BRASS CONNECTOR 1/8" FOR TUBE D=4	
		UP TO S/N.9005MM40756141	
54	227901103	NIK/BRASS 90°CONNECT.DOUBLE FAST/LOCK	
		UP TO S/N.9005MM40756141	
55	9121.127.00A	SOLEN.VALVE 15VA 2W.1/8"FEM.DN3 230V	
	9121.127.00F	SOLEN.VALVE 15VA 2W.1/8"FEM.DN3 120V	
56	140328059	OR 2015 IN SILICONE PTFE/FDA	
		UP TO S/N.9005MM40756141	
57	288582200	SENSOR ASS.FOR ALLUM.BOILER AS.	
58	145951600	ELECTRIC INSULATING DISK D=16	
59	282058858	V2 TUB.BOILER W/ADDIT.RESIST.1100W 230V	
	282058855	V2 TUB.BOILER W/ADDIT.RESIST.1100W 120V	
60	9161.435	BLK TUBOL.BOILER SUPPORT FOR SUPERAUTOM.	
61	227876600	CONNECTOR AS.TEFLON 2X4 L=300 MM	
62	123453902	SELF-LOCKI.NUT M5X0,8 DIN 980 CLA.8	
63	9011.144	SS FORK FOR TUBE D.4	
64	140326662	OR METRIC 0040-20 IN SILICONE	
65	U140.004	PANELVIT TCB 3,0X12 DIN 7505 B GAL	
66	U043.030	screw TCBC M5,0X30 UNI 7687 GALV.	
67	227900620	BRASS 90° DOUBLE CONNECTOR	
		FROM S/N.9005MM40756142	
68	9161.018	BRACKET FOR TURBINE	
69		**PARTICULAR NOT AVAILABLE**	SEE PART.N°70

Saeco INTERNATIONAL GROUP

CA SAECO MAGIC COMFORT + REDESIGN

TAVOLA 2B di 5 E003.061.02

VERSIONI AUS D B USA CH RC

TYPE: SUP 012 DER

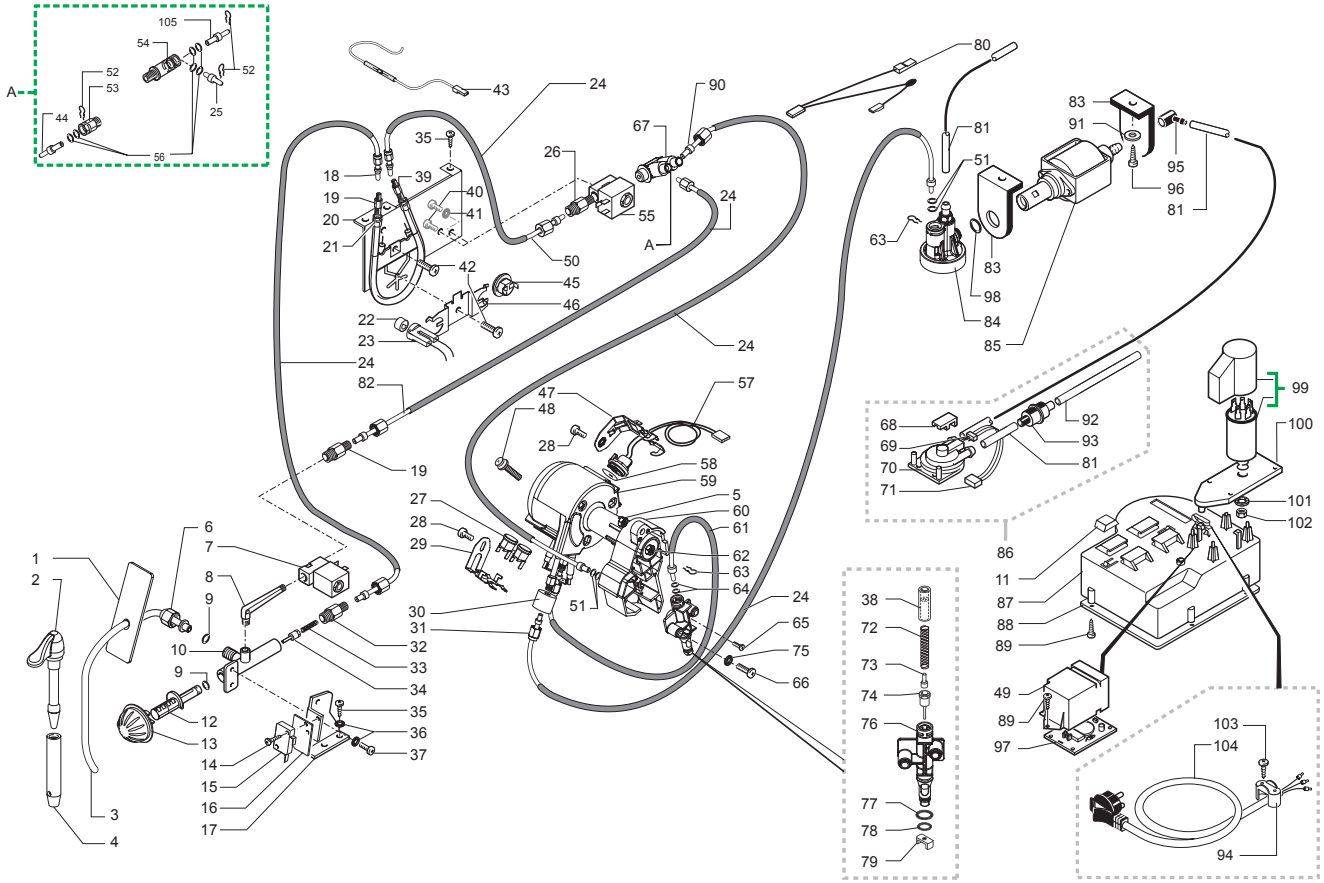

Rif.	Code	Description	Version
70	286473300	-M-VDE TURBINE WITH SENSOR KIT	WITH PART.N°69
71	0314.815	CONNECTOR ASS. 3POLE TURBINE PROF.	
	0317.830	CONN. ASS. 3 POLE TURBINE PROFES.U	USA
72	9011.132	SPRING FOR PIN	
73	9011.075	ADAPTER FOR LONG PIN	
74	227660103	NIK/BRASS PISTON L=20,9 ASSY.	
75	128310521	WASHER UNI 8842 A5 SS	
76	9161.434	BOILER PIN	
77	NM01.035	OR ORM 0090-20 SILICONE	
78	NM01.057	OR ORM 0050-20 IN SILICONE	
79	9011.099	PLASTIC CURSOR FOR BOILER VALVE	
80	0314.820	CONNECTOR ASS. 3POLE 1st SYSTEM	
81	9972.022	SILICONE TUBR 5X8 L.2MT	
82	9979.B43	TEFLON ASS. TUBE 4X2 L.280 OG-OGA	
		FROM S/N.9005MM40756142	
83	9991.056	SUPPORT FOR PUMP	
84	229452100	COMPENSATION AND SAFETY VALVE 16BAR ASSY	
85	187720958	ULKA PUMP EX 5 230 VOLT	
85	187720952	ULKA PUMP EX 5 220 VOLT	
86	0327.A01	VDE TURBINE ASS. COMPLETE WITH TUB	
	0317.A11	TURBINE ASS. COMPL.WITH TUBES UL	USA
87	0301.056.150	POWER CABLE CONT. VDE GREY	
	0335.008.150	POWER SUPPLY CABLE GREY UL	USA
88	0301.055.150	LID FOR POWER CABLE CONT. GREY	
89	129670202	TCB PANELVIT SCREW 3,5X16 TESTA D=8 ZNP	
90	9979.B29	TEFLON ASS. TUBE 2X4 L.280	
		FROM S/N.9005MM40756142	
91	U207.004	PLAIN WASHER 4,3X16 UNI 6592 GAL	
92	9972.247	SILICONE TUBE 5X10 L.2000 MM	
93	144650300	SUCTION FILTER GAUZE NET 500 (NEW	
94	9991.039	CABLE RETAINER UL	USA RC
95	147920150	90° INLET CONNECTOR PUMP	
96	U110.003	screw AUT.TCB 3,5X9,5 DIN 7981 F	
97	0301.828.00F	FILTRATION CARD SUPERAUTOM.	120V USA RC
98	NM02.020	OR 2031 TERMOIL	
99	0301.A12.00A	ASS CAPPUCCIO + FILTRO	
100	0327.035.150	ANTIDISTURB FILTER SUPPORT	
101	U208.009	TOOTHED WASHER 8,4X15 UNI 3703	
102	U302.007	nut HEXAGONAL M8 UNI 5588	
103	U140.009	PANELVIT TCB 3,0X16 DIN 7505 B GAL	
104	NE01.120	CABLE SCHUKO GREY H05	B D
	NE01.114	POWER CABLE AUSTRALIA	AUS
	NE01.116	CABLE USA 3P BLACK 1 MM	USA
	NE01.112	CABLE TW 3 POLE GREY 1 MM	120V RC
	NE01.118	CABLE CH H05 GREY 1 MM	CH

Rif.	Code	Description	Version
105	9979.A73	TEFLON ASS. TUBE 4X2 L.280 7-7	
		UP TO S/N.9005MM40756141	
	9010.131.00A	BOILER AS.MAGIC CONFORT INOX 230V	
	9010.131.00F	BOILER AS.MAGIC CONFORT INOX 120V	

Saeco INTERNATIONAL GROUP

CA SAECO MAGIC COMFORT + REDESIGN

VERSIONI (AUS) (D) (B) (USA) (CH) (RC)

TYPE: SUP 012 DER

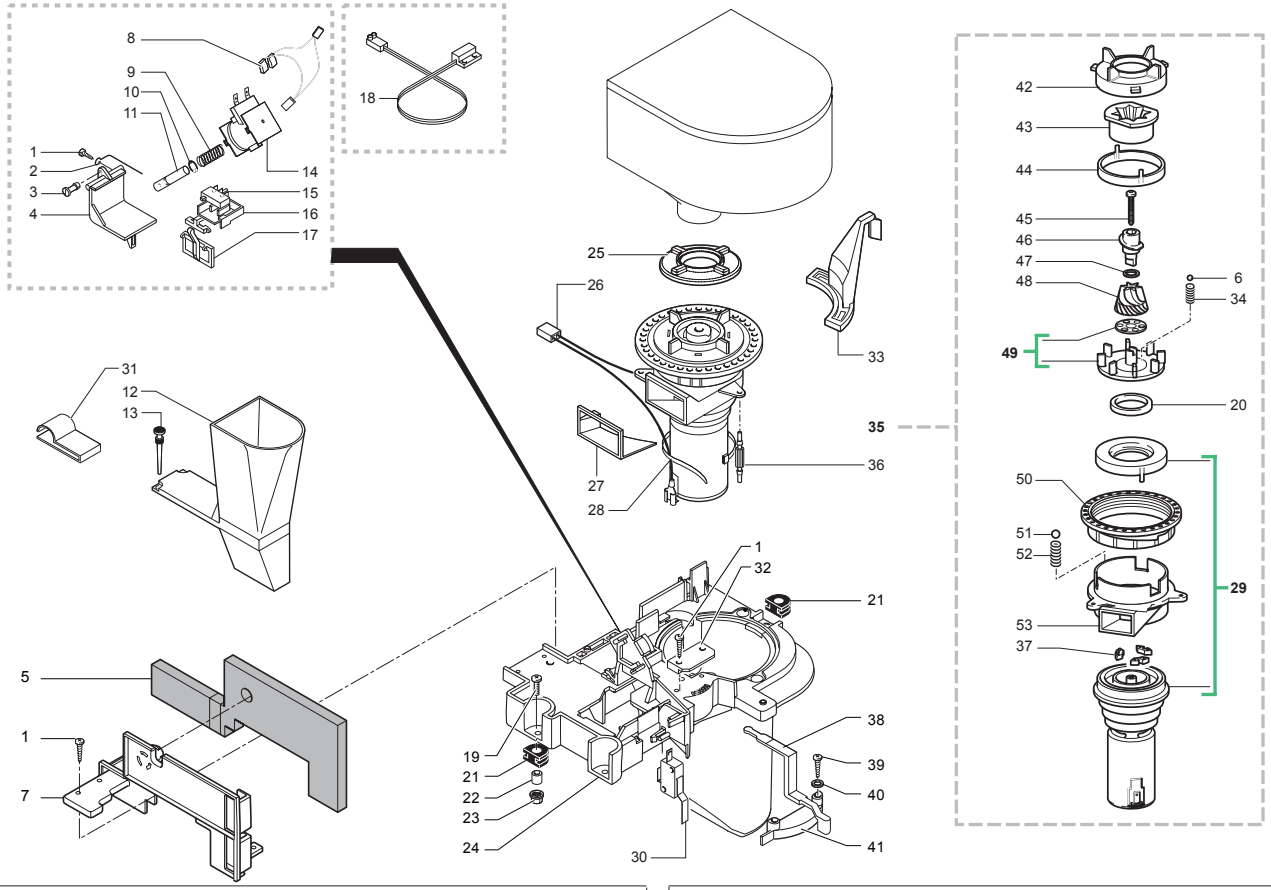

Rif.	Code	Description	Version
01	U110.004	screw AUT.TCB 3,5X6,5 DIN 7981 F	
02	9161.048	SCRAPER ROD	
03	9161.076.150	DOSER DOOR PIN GREY	
04	9161.074.150	DOSER DOOR GREY	
05	9161.382	INSULATOR FOR COFFEE GRINDER	
06	128610521	STAIL.STEEL AISI 304 SPHERE D=5,5MM	
07	9161.366.150	GREY/7016 SUPPORT FOR INSULATOR	
08	0301.866	CONNECTOR ASS. 2 POLE DOSER COIL	
09	126764818	SPRING ELECTROM.BEAN DOSER MAGIC	
10	U701.003	SNAP RING 7 UNI 7434	
11	9161.041	DOSER ELECTROMAGNET CORE	
12	9161.223.150	COMPL.HOPP.FOR POWDER COFFEE GRE.	
13	9161.082	RUBBER COUPLER	
14	9129.A21.00A	WHOLE COIL X SUPERAUT.	
14	9129.A07.00H	COFFEE DOSER COIL ASS.240V	
14	9129.A07.00F	COFFEE DOSER COIL ASS.120V	
15	NE05.017	MICROSWITCH	
16	9161.072.150	MICRO SUPPORT CURSOR GREY	
17	9161.073.150	DOSE CONTROL COMPENSATOR GREY	
18	0301.811	CONNECTOR 2 POLES LEVEL ASSY.	(USA) (RC)
	0317.829	CONNECTOR 2 POLES LEVEL UL ASSY.	
19	U043.004	ZN-B TCB SCREW M4X16	
20	140360200	FELT RING 40X34X5	
21	9991.005	RUBBER FOR COFFEE GRINDER	
22	9141.003	SPACER FOR RUBBER	
23	U324.006	NUT M4 FLANGED INDENTED BASE	
24	9161.365.150	GREY PLATE FOR COFFEE GRINDER	
25	1505.020	GASKET COFFEE GRINDER UL	
26	0301.869	CONNECTOR ASS. 2 POLE COFFEEGRINDE	
	0301.868	2P.CONNECT.COFFEE GRINDER UL	(USA) (RC)
27	1505.014	COFFEEGRINDER SEAL	
28	144320200	SELF LOCK STRIP L=200MM	
29	1501.R09.00F	MOTOR SPARE UNIT 120V	
29	0301.R10.00A	SPARE MOTOR UNIT MC 230V	
30	NE05.037	MICROSWITCH	
31	NE17.018	ADESIVE STRETCH ELIMINATOR	
32	9161.097.150	LEVER FIXING PLATE GREY	
33	9161.080.700	GRINDING ADJUSTM.LEVER BLACK	
34	126765517	STEEL SPRING SPHERE D=5,5 MOTOR MAGIC	
35	9140.036.00A	STANDARD COFFEE GRINDER 230V	(CH) (B) (D)
	9140.035.00A	STANDARD COFFEE GRINDER ITA 230V	(AUS)
	9140.036.00F	STANDARD COFFEE GRINDER 120V	(RC) (USA)
36	9991.103	ANTIVIBRATION FOR COFFEEGRINDER	
37	140230400	SHOCK ABS .CONICAL GRINDER SUPP.MAGIC	
38	0313.003.050	ADJUSTMENT LEVER BLACK	
39	129512503	SCREW TCB 2,9X9,5 DIN 7981 NICK	
40	U201.001	PLAIN WASHER 3,2X9 DIN 7349 GAL	

Rif.	Code	Description	Version
41	9161.403.150	DOSE ADJUST. SCALE GREY RAL 7016	
42	149186150	BLACK UPPER GRINDER SUPPORT MAGIC	
43		**PARTICULAR NOT AVAILABLE**	SEE PART.N°48
44	142844550	UPPER GRINDER COVER COFFEE GRIND. MAGIC	
45	129931002	TORX SCREW T10 TCB 3,5X40 SX ZNG	
46	147470763	INCREASE SCREW PIN COFFEE GRINDER MAGIC	
47	U201.002	PLAIN WASHER 10X16X0,2DIN 988 GAL	
48	226477700	KIT ITAL MILL GRINDERS	WITH PART.N°43
49	149188750	CONICAL GRIND. SUPP. + RING MAGIC	
50	146570950	RING NUT FOR GRINDING ADJUSTMENT MAGIC	
51	128610421	STAIL.STELL AISI 304 SPHERE D=3,2MM	
52	126770117	NEW SPRING SPHERE D=3,2 MOTOR MAGIG	
53	9141.080	MOTOR SUPPORT	

Saeco INTERNATIONAL GROUP

CA SAECO MAGIC COMFORT + REDESIGN

VERSIONI (AUS) (D) (B) (USA) (CH) (RC)

TYPE: SUP 012 DER

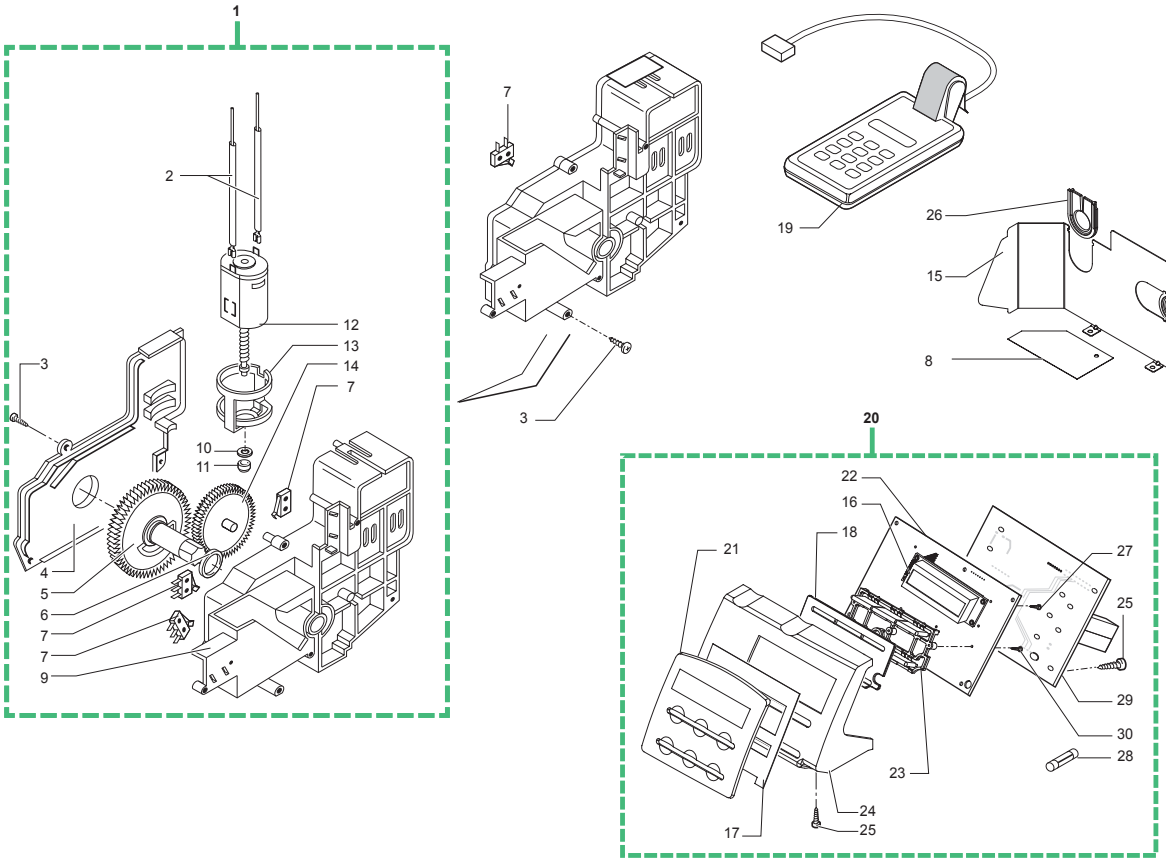

Rif.	Code	Description	Version
01	9120.046.150	RATIOMOTOR WITH GREY TUBE ASSY.	
	9120.049.150	RATIOMOTOR WITH GREY TUBE UL ASSY.	
02		**PARTICULAR NOT AVAILABLE**	SEE PART.N°12
03	129670202	TCB PANELVIT SCREW 3,5X16 TESTA D=8 ZNP	
04	9121.043.150	RATIOMOTOR LID GREY	
05	9121.069.150	GEAR Z=108 FOR MOUNTING PLATE M4000	
06	9161.368	MYLAR WASHER FOR RATIOMOTOR	
07	NE05.038	MICROSWITCH	
08	0360.025	MYLAR GUARD FOR ELECTRONICS	
09	9121.063.150	RATIO MOTOR CASING WITH GREY TUBE ASSY.	
10	148380200	WASHER BAKELIZZATE D=5,5	
11	9121.046	SINTERED BUSH FOR MOTOR	
12	9120.045	MOTOR FOR MAGIC RATIO MOTOR ASSY	WITH PART.N°2
13	9121.044	ANTIVIBRATION FOR MOTOR	
14	9121.042	GEAR Z.12/90	
15	9161.430.470	PROTECTION BRACKET	
16	0360.805	DISPLAY MAGIC REDESIGN	
17	0360.026	ADHESIVE X MAGIC CONFORT	
18	0360.016	PROTECTION TOUCH PANEL IN SILICONE	
19	1411.000.00A	PROGRAMMER MAGIC 230V	
20	0361.R02.77A	KIT ASS.ELECTRONIC CONFORT+ 230V	(B) (D) (CH)
	0361.R02.77F	KIT ASS.ELECTRONIC CONFORT 120V	(USA) (RC)
	0361.R03.77A	KIT ASS.ELECTRONIC CONFORT+ 230V	(AUS)
21	0361.002.770	TRANSPARENT ESCUTCHEON CONFORT RED	
22	0361.802	CPU CARD CONFORT+ REDESIGN 230V	
	0361.803	CPU CARD CONFORT+ REDESIGN 230V	(AUS)
23	0360.015.430	TOUCH PANEL 6 BUTTON	
24	0360.011.670	ELECTRONICS SUPPORT CONFORT RED.	
25	U140.004	PANELVIT TCB 3,0X12 DIN 7505 B GAL	
26	9161.429	PASSACAVO GRANDE X SQUADRETTA	
27	U145.002	screw AUT.TCB 3,0X6,0 PT WN 1412 S	
28	NE13.044	FUSE 5,0X20 8A 250V DELAYED	
29	0361.801.00A	POWER CARD CONFORT+ REDESIGN 230V	
	0361.801.00F	POWER CARD CONFORT+ REDESIGN 120V	
30	U117.001	screw AUT.PT TCB 2.5X006 WN 1442	

Rif.	Code	Description	Version

Saeco INTERNATIONAL GROUP

CA SAECO MAGIC COMFORT + REDESIGN

VERSIONI AUS D B USA CH RC

TYPE: SUP 012 DER

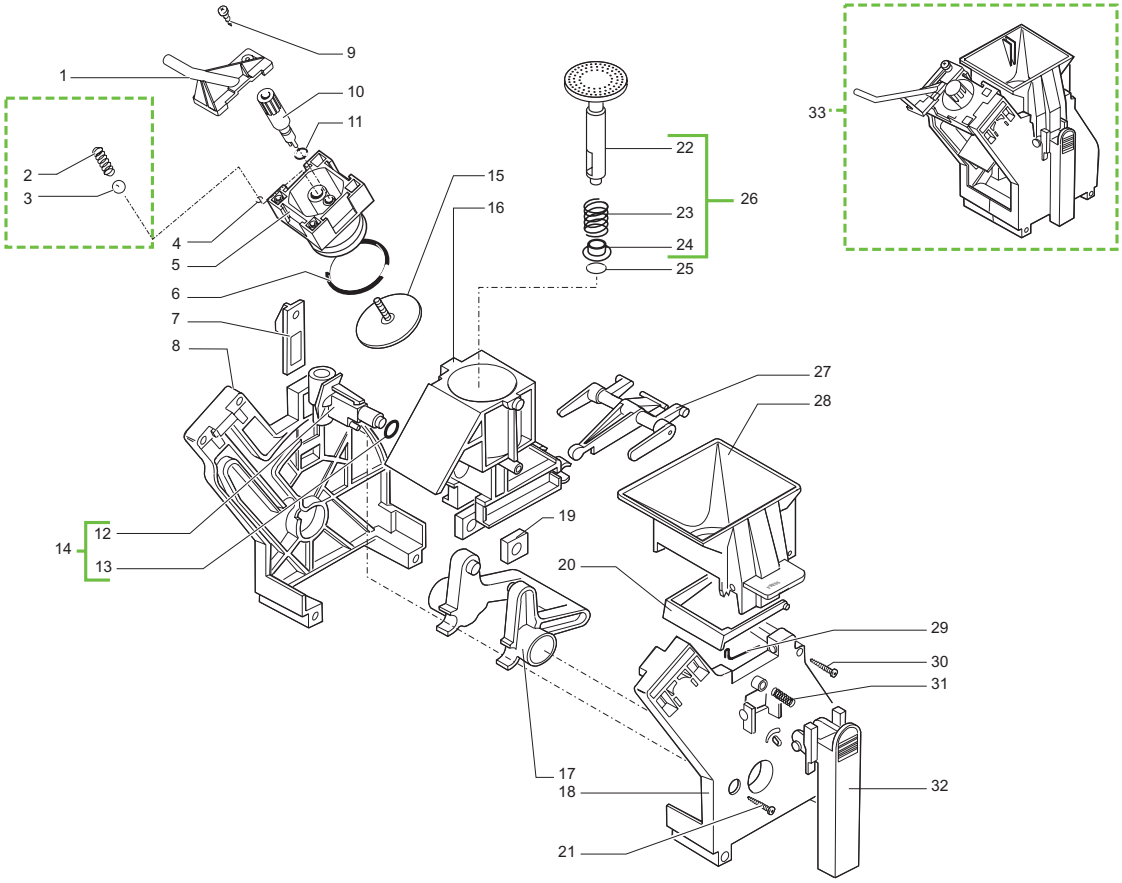

Rif.	Code	Description	Version
01	9161.367.150	GREY COFFEE OUTLET SLEEVE	
02	9161.222	SS.CONICAL SPRING	
03	9991.168	GLASS SPHERE D.5MM	
04	NM02.013	OR ORM 0080-15 TERMOIL	
05	9161.193.150	GREY COUNTERPISTON FOR COFFEE UNIT	
06	NM01.044	OR ORM 0320-40 IN SILICONE PTFE/FDA	
07	9161.067.150	GREY PLATE FOR UNIT COUPLING	
08	9161.070.150	GREY REAR PLATE FOR UNIT	
09	U140.019	SCREW TCB TORX 10 3X16 PLAST SS	
10	9169.A14.050	PIN FOR PERCOLATOR BLACK	
	9169.A14.150	PIN FOP PERCOLATOR GREY	AUS
11	NM02.006	OR R5 TERMOIL	
12	9161.064.150	GREY WATER INLET SLEEVE BREW UNIT	
13	NM02.007	OR 2025 TERMOIL	
14	0301.R04.150	GREY WATER INLET SLEEVE BREW UNIT ASSY.	
15	223740300	PERCOLATOR DE=35,8 ASSY.	AUS
	9160.075	PERCOLATOR DE=35,8 ELFO ASSY.	
16	9161.195.150	GREY CONTAINER FOR UNIT ASSY.	
17	9161.066.150	ELBOW SHAFT FOR UNIT GREY	
18	9161.071.150	GREY FRONT PLATE FOR UNIT	
19	9161.094.150	GREY DRILLED BLOCK BREW UNIT	
20	9161.060.150	GREY SCRAPER FOR COFFEE UNIT	
21	U140.020	PANELVIT TCB 3,0X16 DIN 7505 B SS	
22	9161.306.150	GREY INTEGR.PISTON BREW UNIT 8GR.ASSY.	
23	9161.198	SS.8GR.BREW UNIT PISTON SPRING	
24	9161.191	WHITE 8GR.-12GR.BREW UNIT PISTON BUSH	
25	NM02.018	OR ORM 0090-25 TERMOIL	
26	9161.343.150	GREY 8GR.BREW UNIT NTEGR.PISTON GEN.ASSY	
27	9161.065.150	GREY CONNECTING ROD FOR UNIT 8GR.	
28	9161.123.150	GREY HOPPER FOR UNIT W/SILK SCREEN PRESS	
29	9161.046	SPRING FOR UNIT SCRAPER	
30	U109.026	SS.SCREW AUT.TCB 3,5X19 DIN 7981 C	
31	9161.045	SPRING FOR UNIT HANDGRIP	
32	9161.069.150	GREY HANDGRIP FOR COFFEE UNIT	
33	9160.069.150	BREW UNIT ELFO TYPE C REDESIGN	
	9160.077.150	BREW UNIT ITALY TYPE C REDESIGN	AUS

Rif.	Code	Description	Version